MT-PTZ-IP Manual

autoscript

Intelligent Prompting System

Intelligent Prompting Monitors and Accessories

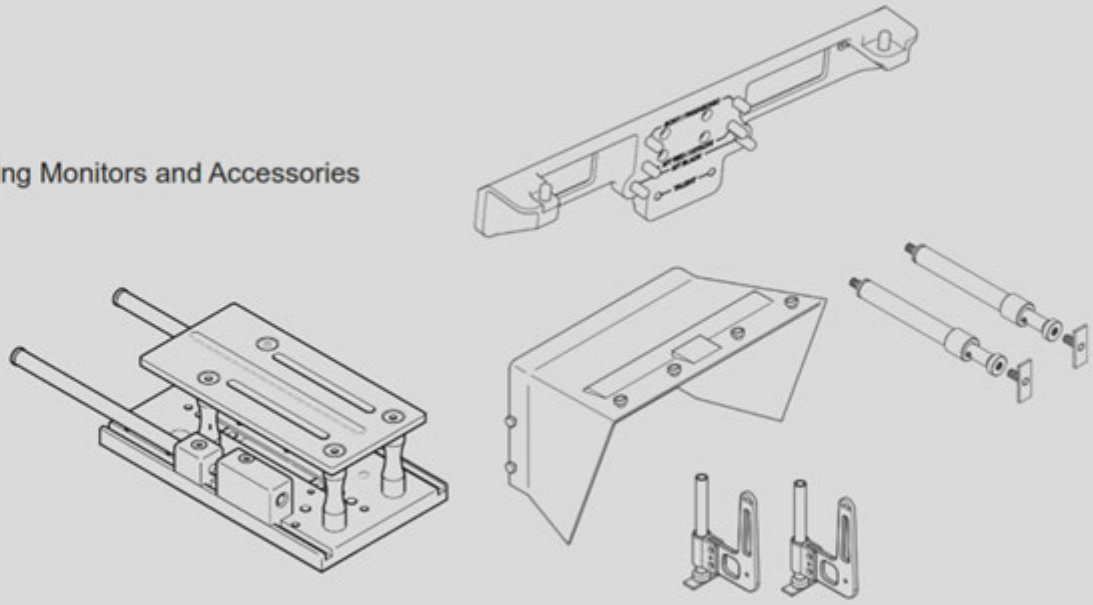

EN

www.autoscript.tv

Attach Legacy Adaptor to the Prompt Monitor

1. Offer the hood mounting bracket to the rear panel of the prompt monitor.
2. Locate the monitor into the mounting bracket recess.
3. Secure the bracket to the monitor; first using the 2 outer 10mm M5 socket screws, then fix the 4 x centre 16mm M5 socket screws.

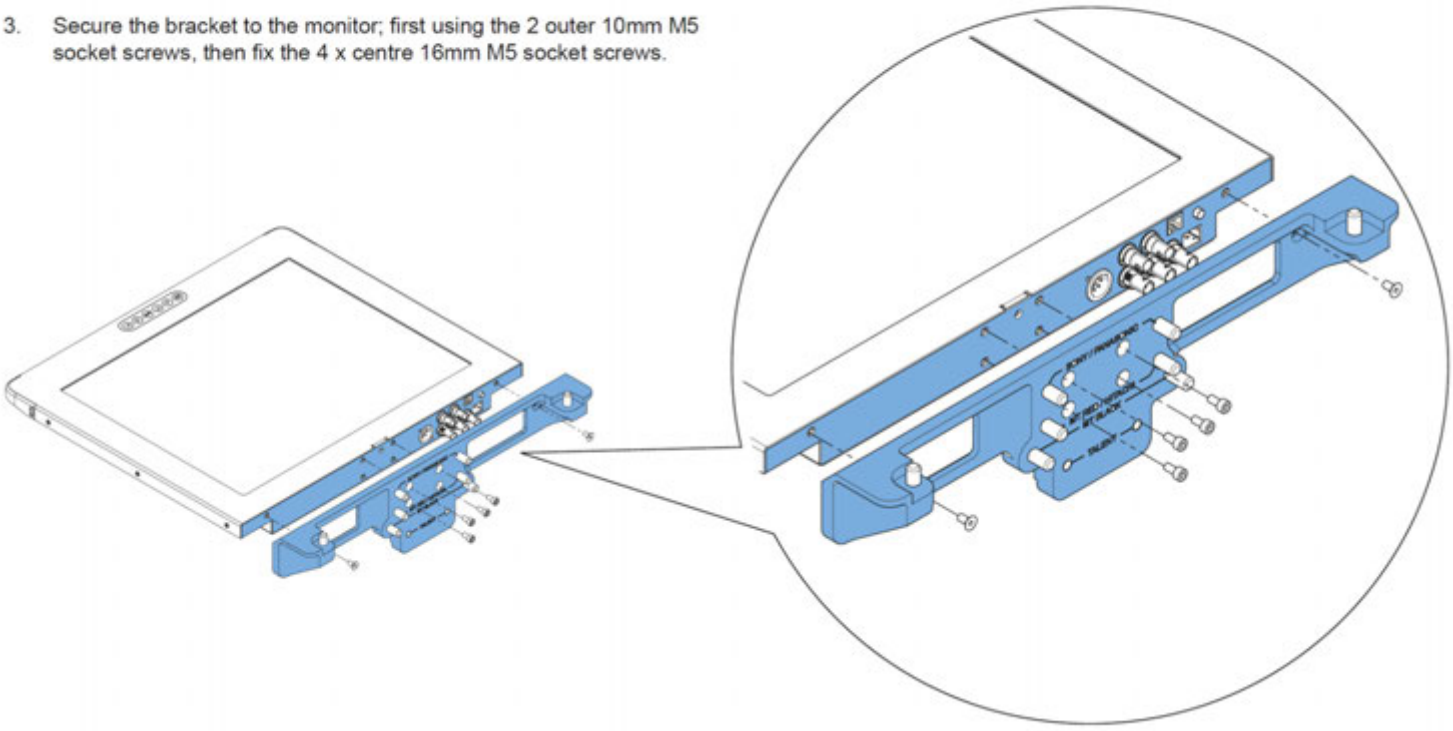

1. Fit the camera head support plate to the base of the MT-BLACK mounting plate.

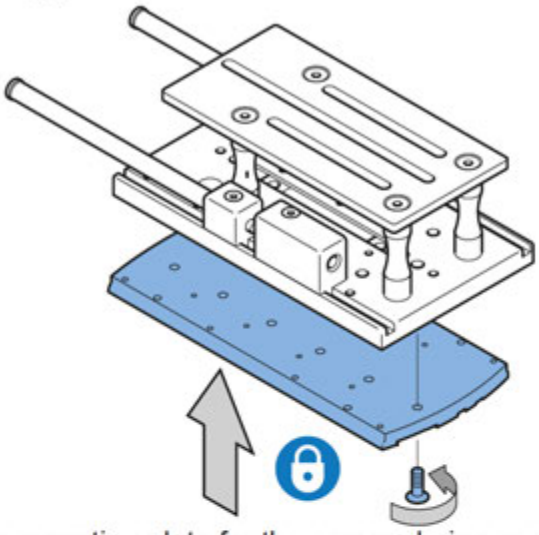

2. Fit the mounting plate for the camera being used to the top of the MT-BLACK mounting plate, using the fixing screws provided.

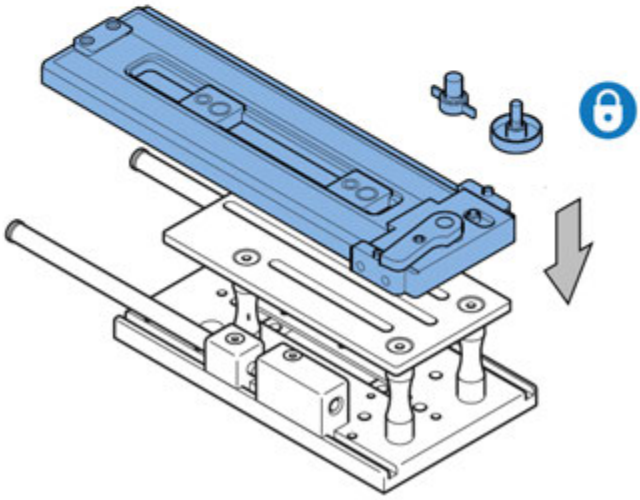

⚠ **Information:** For PTZ cameras you may attach the PTZ plate directly to the MT-BLACK

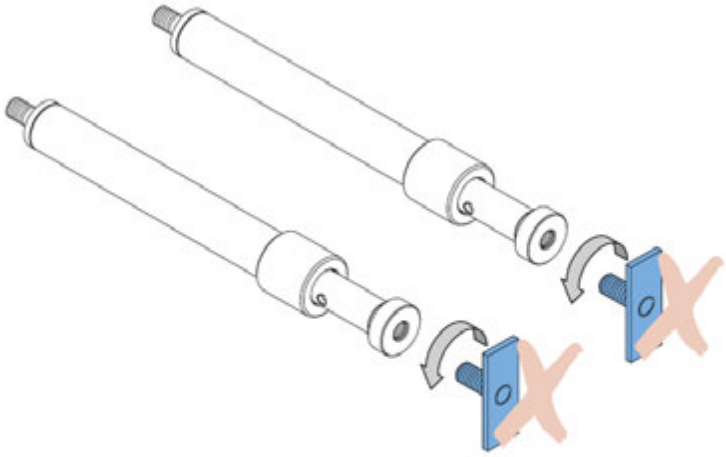

Remove the end plates from the telescopic rods and store somewhere safe, they will not be required for this set up.

Screw the telescopic rods (TR-) into the mounting blocks on the MT-BLACK mounting plate.

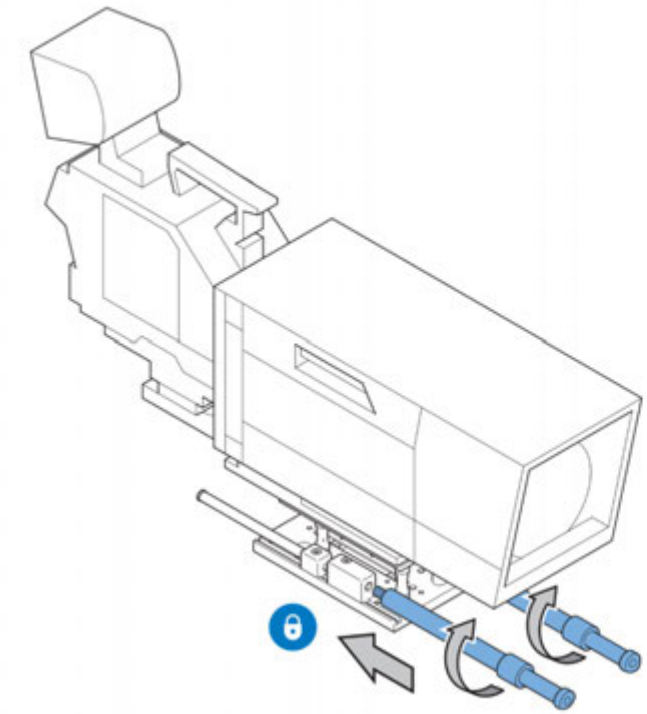

Mounting the Monitor

The Legacy Backplate has 3 mounting positions.

a. Sony / Panasonic (Top)
b. MT RED / Hitachi (Middle)
c. MT BLACK (Bottom)

CAUTION! It is advised that two people attach the monitor to the telescopic rods, one supporting the monitor while the other screws in the rods.

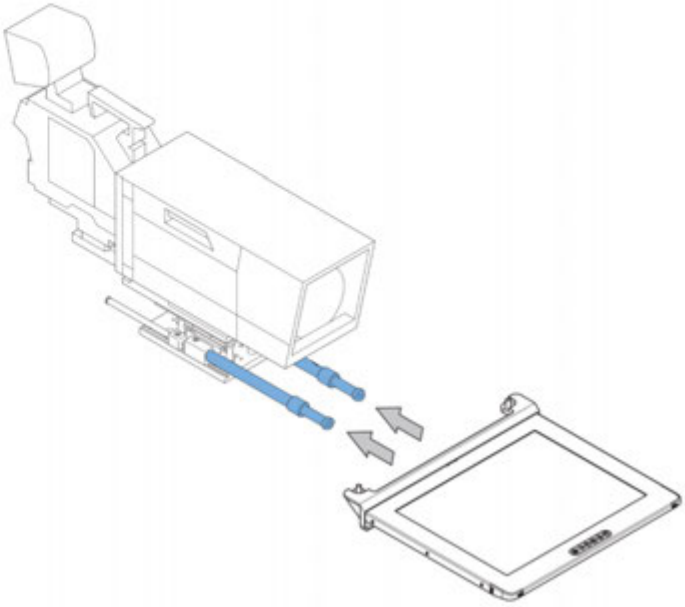

Information: Camera shown here is with Studio Box Lens.
The same process is applied for PTZ cameras.

Offer the monitor backplate to the telescopic rods.

Using the most suitable mounting points on the backplate, screw the rods to the backplate.

Tighten the fixing by Inserting a small Allen key or similar into the hole in the telescopic rod to provide leverage.

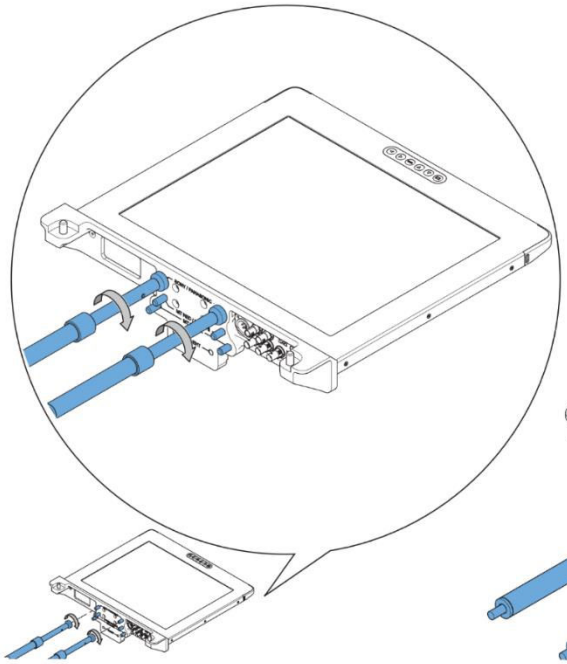

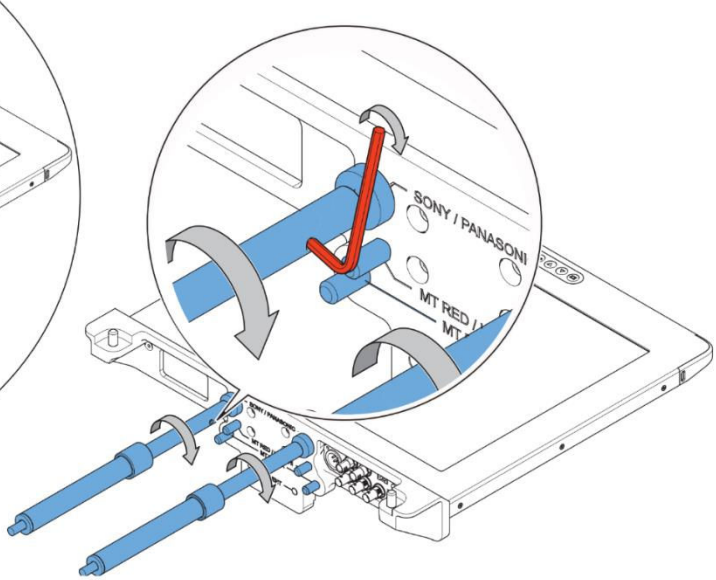

Align the hood bracket and two fixing screws with the holes in the side of the hood.

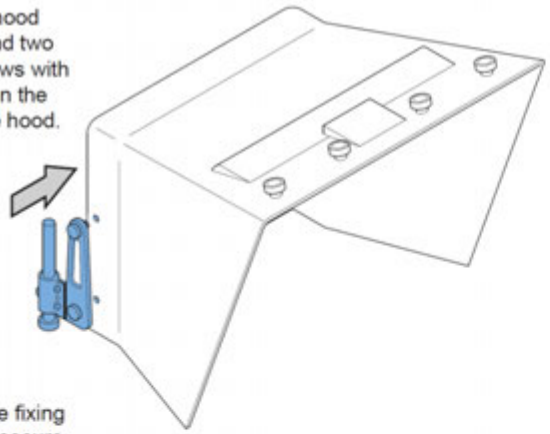

Tighten the fixing screws to secure the hood bracket in position.

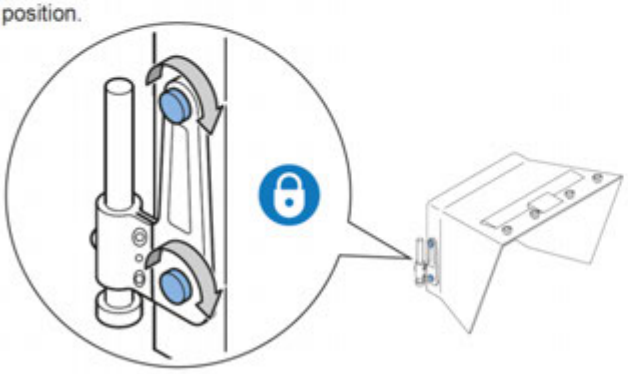

Repeat steps 1 and 2 for the opposite hood bracket.

Remove the rods from the bracket and screw onto the hood mountings.

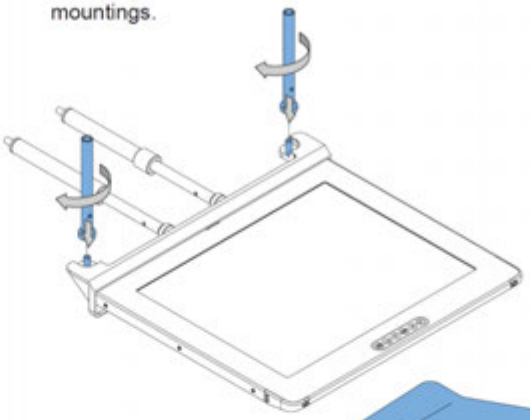

Slide the hood brackets and hood onto the rods.

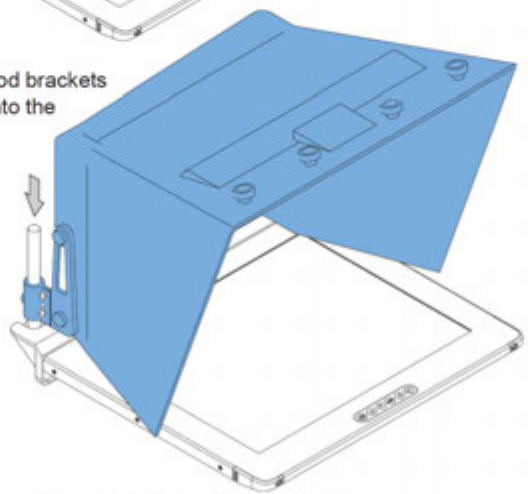

Lock into position using the bracket lock knobs.

⚠ **Information:** Hood shown here is Medium Wide Angle (HD-MWA)
The same process is applied for Folding Hood Wide Angle (FH-XW)

Adjusting the Vertical Hood Position

The vertical position of the hood must be adjusted to centralise it with the camera lens.

1. Loosen the two lock screws to adjust the position of the hood on the rods.
2. Adjust the vertical position of the hood to centralise it with the camera lens and fully re-tighten the lock screws.

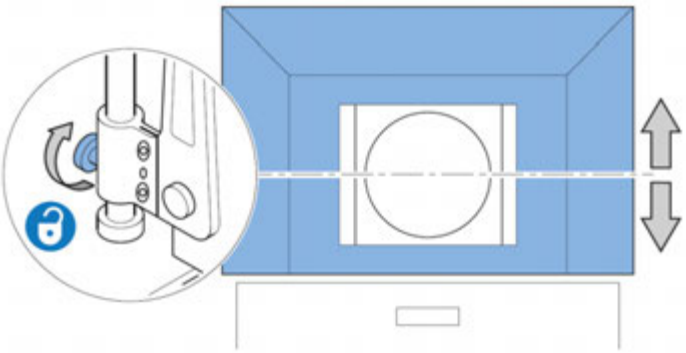

Adjusting the Prompter Assembly Position

The horizontal position of the prompter assembly must be adjusted to optimise its position relative to the camera position.

1. Loosen the twist locks on the telescopic rods and move the prompter assembly back until the hood overlaps the camera lens.
2. Tighten the twist locks to secure the assembly.

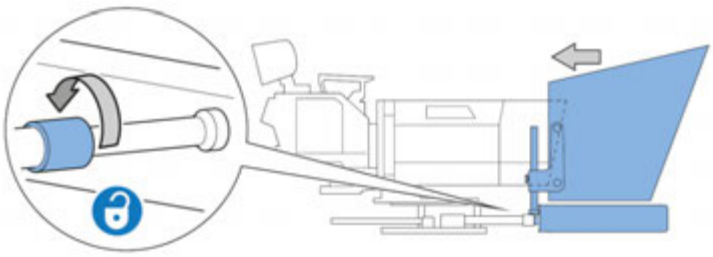

Fitting the Reflective Glass Panel

WARNING! Risk of personal injury or injury to others. Care must be taken when handling and installing the reflective glass panels.

WARNING! Only use the correct size glass panel designed for the installed hood.

When the hood has been installed, the reflective glass panel can be fitted to the prompter assembly.

Panel Orientation

For the EPIC-IP prompter to display images, it is essential that the reflective side of the glass is installed facing outwards. The reflective side of the glass can be established as follows:

Carefully hold a blunt object such as a coin against the surface of the glass.

If the object is being held against the reflective side, there will be no gap (depth of the glass) before the reflection.

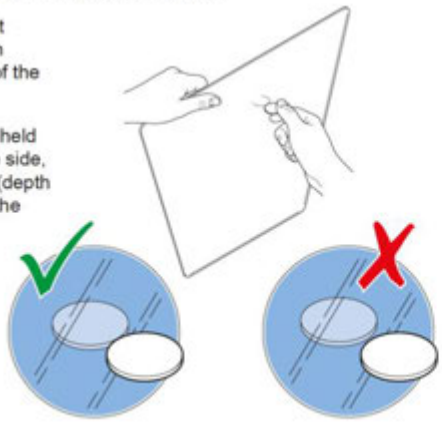

Fitting Glass Panel

1. Remove all the fixing screws from the top of the hood to release the top glazing bar.

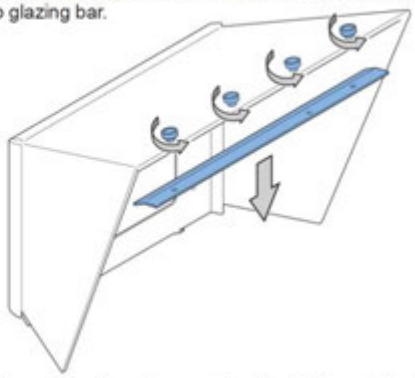

2. Carefully position the glass panel on the bottom glazing bar inside the hood.

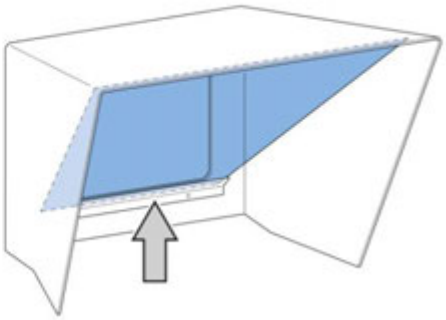
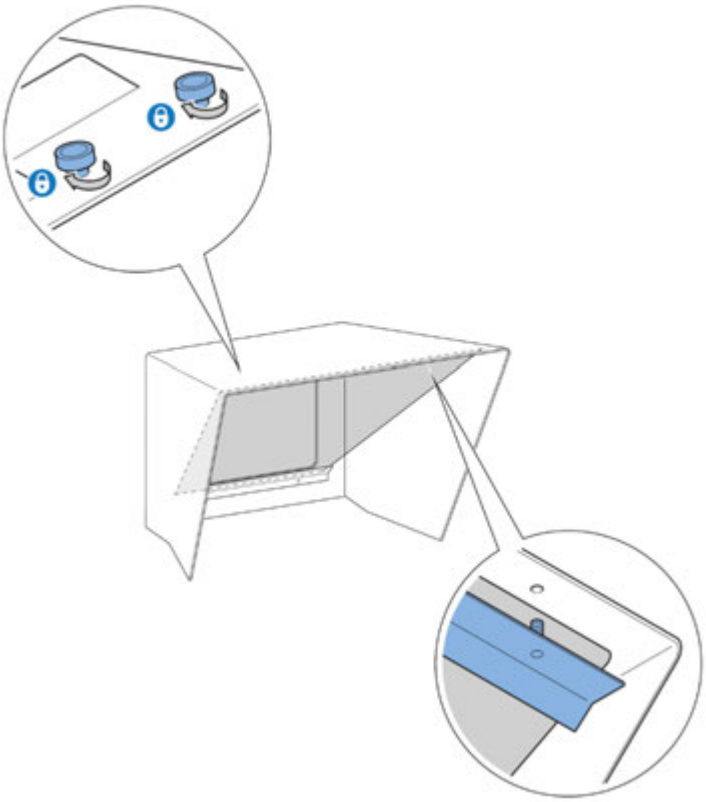
3. With the glass supported at all times, replace the top glazing bar and secure with the fixing screws.